MODEL ALEC-FF

HINGED FILTER FRAME

STANDARD INDUSTRY TOLERANCES APPLY. SPECIFICATIONS SUBJECT TO CHANGE WITHOUT NOTICE.

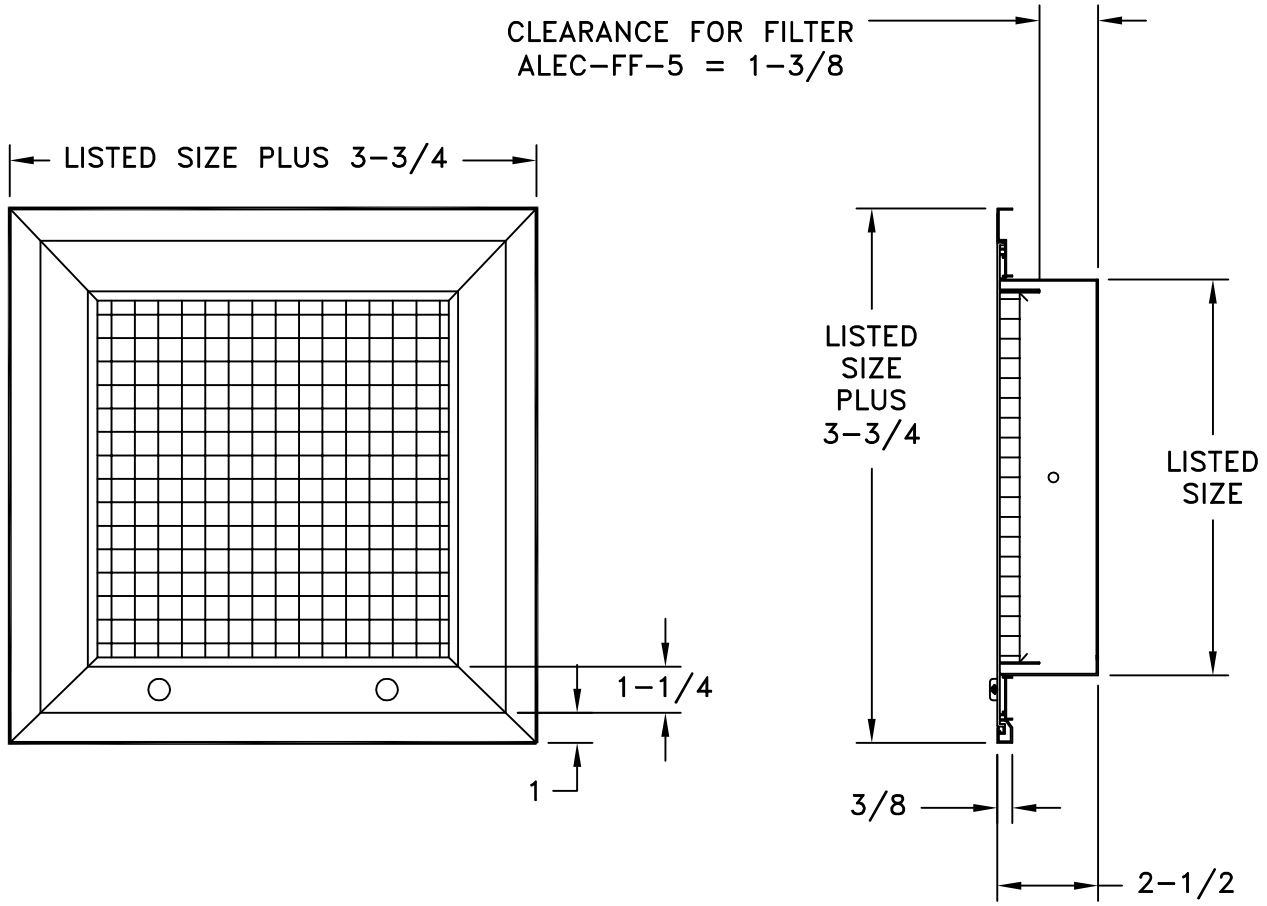

The Model ALEC-FF-5 is a return air filter grille that has an aluminum square pattern grid providing maximum free area. ALEC-FF-5 has a 1/2" x 1/2" x 1/2" core grid.
The Model ALEC-FF has concealed hinges with 1/4 turn fasteners and an aluminum frame. 1" disposable filter (by others). Standard finish is white.

PROJECT:
ARCHITECT:
ENGINEER:
CONTRACTOR:
LOCATION:

J&J REGISTER
AIR DISTRIBUTION PRODUCTS