DECORATIVE SERIES

METAL BASEBOARD DIFFUSER

STANDARD INDUSTRY TOLERANCES APPLY. SPECIFICATIONS SUBJECT TO CHANGE WITHOUT NOTICE.

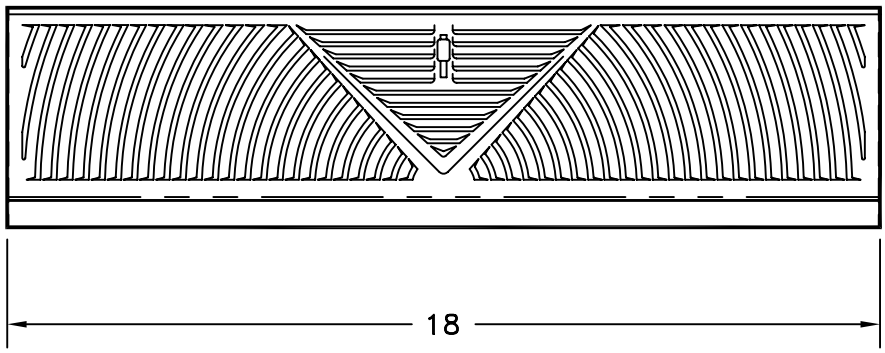

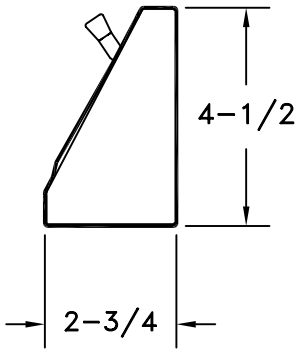

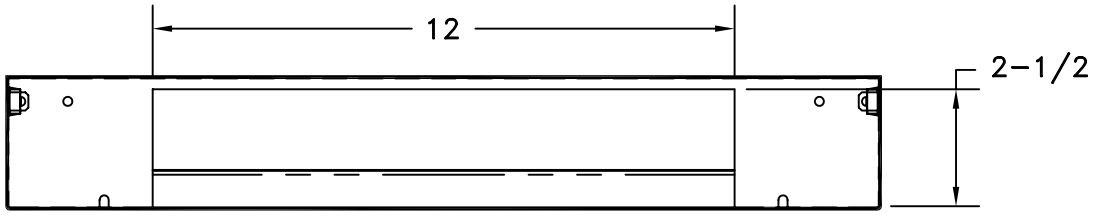

BOTTOM VIEW

Brass plated steel construction with an integral plate damper. Designed to blanket walls and windows with air from a baseboard installation. The face snaps out for mounting the back panel.

PROJECT:

ARCHITECT:

ENGINEER:

CONTRACTOR:

LOCATION:

J&J REGISTER
AIR DISTRIBUTION PRODUCTS

J&J Register, 500 E. Eighth St., Holland, MI 49423 Telephone (616) 392-7855 Fax: 1-800-223-8461